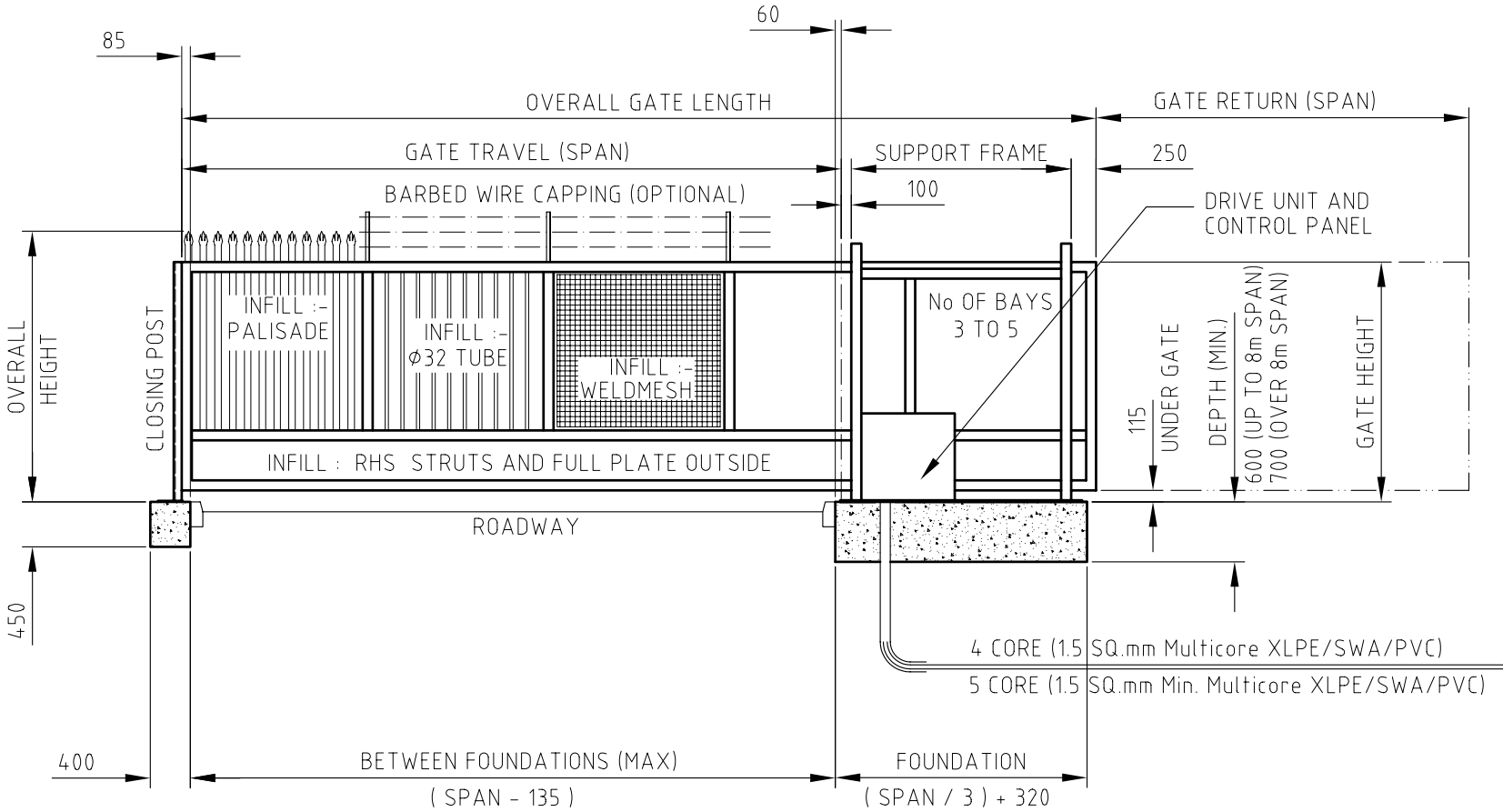

NOTE A :

CONCRETE TO BE CAST A MINIMUM OF 7 DAYS BEFORE INSTALLATION OF EQUIPMENT.
(GRADE C32/40 20mm AGGREGATE)
BOTH FOUNDATIONS SHOULD BE SMOOTH, FLAT AND LEVEL WITH EACH OTHER.

INFILL OPTIONS:-

TUBE, BAR, MESH, PALISADE, ETC.

HANDING:-

GATE SHOWN IS RIGHT HAND
LEFT HAND IS MIRROR IMAGE.

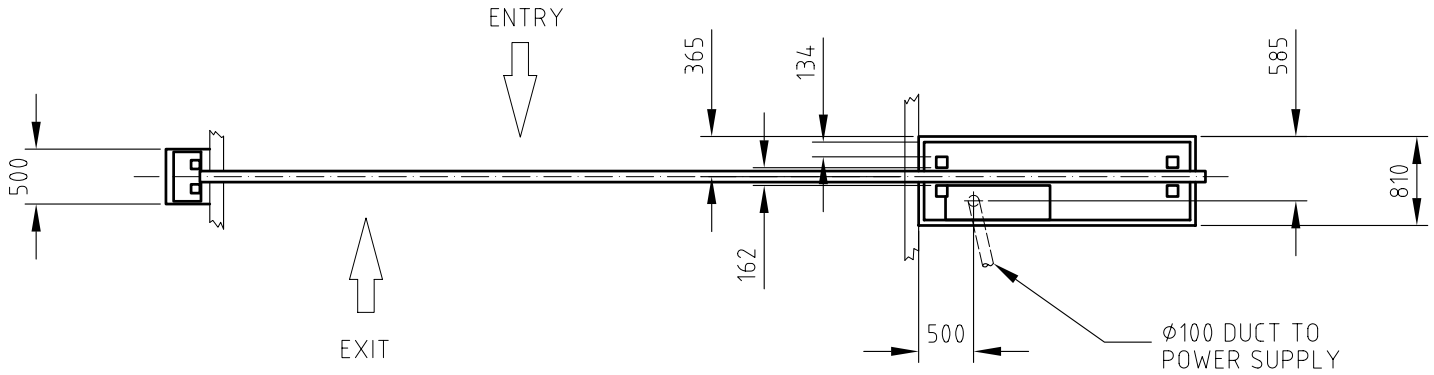

THIS DRAWING REMAINS OUR PROPERTY & MAY NOT BE COPIED OR PASSED TO A THIRD PARTY WITHOUT OUR WRITTEN CONSENT

NEW GATE

NEWGATE(Newark)LTD
BRUNEL,DRIVE,NEWARK,NOTTS,NG24 2DE
TELEPHONE:(01636) 700172 & 704000
FAX:(01636) 605400

IF IN DOUBT– STOP– ASK !

Issue.	Date.	Mod.no.	Description	Drawn By

Ref.no.	Qnt.	Part name	Material	Dimension	Remark

Title: OUTLINE AND FOUNDATIONS TYPE 1 SLIDING GATE (RH)

Date	Drawn by	Scale	Drawing no.
6/1/00	MC	1:50	103/3/17318